OFFICIAL PLAT

SITE PLAN (ASBUILT)

CIC NUMBER 191
A CONDOMINIUM, BOULDER RIDGE TOWNHOMES
THIRD SUPPLEMENTAL CIC PLAT

This Third Supplemental CIC Plat is part of the Third Amended Declaration recorded as

Document No. A-954526

on this 10th day of February, 2003.

Daniel J. Hall
Director of Property Records and Licensing

Wendy von Wald
Deputy

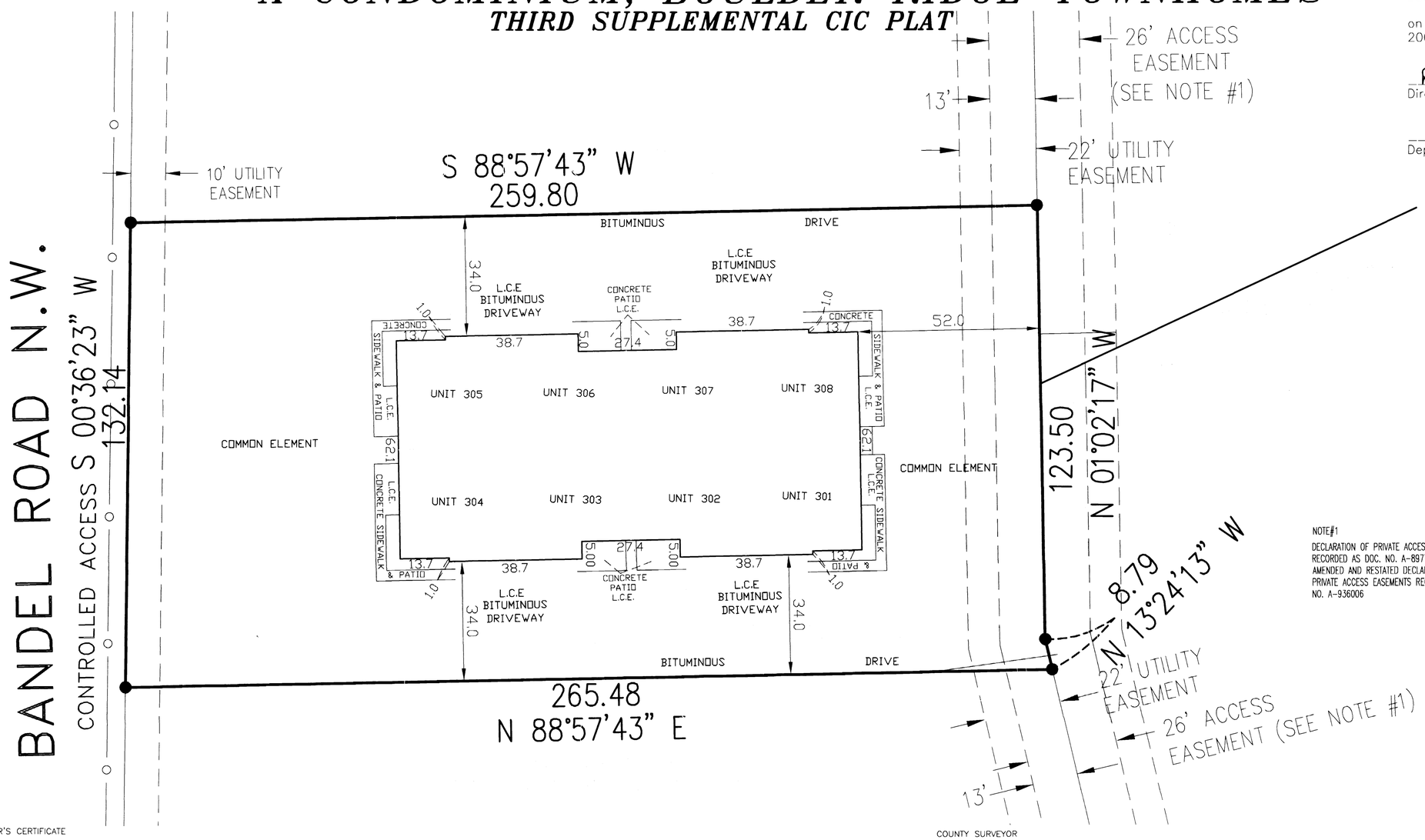

NOTE#1
DECLARATION OF PRIVATE ACCESS EASEMENTS RECORDED AS DOC. NO. A-897726 AND ALSO AMENDED AND RESTATED DECLARATION OF PRIVATE ACCESS EASEMENTS RECORDED AS DOC. NO. A-936006

20 0 20 40
SCALE 1" = 20'

B.M. ELEV. 1108.38
TOP HYDRANT NUT @ EAST SIDE OF LOT 2 BLK 1, BOULDER RIDGE.

NOTE:

ALL MONUMENTS SHOWN THUS: ● ARE FOUND 5/8" PIPES UNLESS OTHERWISE NOTED.

BASIS OF BEARING SYSTEM : ALL BEARINGS ARE IN RELATIONSHIP WITH THE WEST LINE NE 1/4, SEC 9–107–14 WHICH IS ASSUMED TO BE N01°02'17"W.

DIMENSIONS SHOWN ARE IN FEET AND TENTHS OF A FOOT.

ALL LABELS SHOWN THUS: L.C.E. ARE LIMITED COMMON ELEMENTS.

ALL LABELS SHOWN THUS: C.E. ARE COMMON ELEMENTS.

SURVEYOR'S CERTIFICATE

I, James E. Swanson, do hereby certify that the work was undertaken by or reviewed and approved by me for this CIC Plat of COMMON INTEREST COMMUNITY NO. 191 A CONDOMINIUM BOULDER RIDGE TOWNHOMES, THIRD SUPPLEMENTAL CIC PLAT being located upon the following described property:

Lot 2, Block 1, BOULDER RIDGE, Olmsted County, Minnesota, according to the recorded plat thereof.

and the additional real estate described as follows:

Lots 3, 4 and Lots 7 through 10, Block 1 and Lots 1 through 7, Block 4, and Outlot A, BOULDER RIDGE, Olmsted County, Minnesota, according to the recorded plat thereof.

fully and accurately depicts all information required by Minnesota Statutes, Section 515 B, 2 – 110.

Dated this 5th day of Feb, 2003.

James E. Swanson
James E. Swanson L.S, Minnesota License No. 11622.

STATE OF MINNESOTA
COUNTY OF DODGE

The foregoing instrument was acknowledged before me this 5th day of February, 2003, by James E. Swanson, a Licensed Professional Surveyor.

Beth A. Davis
Notary Public, Dodge County, Minnesota

My commission expires on 1.31.2005

BETH A. DAVIS
NOTARY PUBLIC-MINNESOTA
MY COMMISSION EXPIRES 1-31-2005

PROPERTY RECORDS AND LICENSING

Taxes payable in the year 2003 on the land herein described have been paid, there are no delinquent taxes and transfer has been entered this 10th day of February, 2003.

Daniel J. Hall
Director of Property Records & Licensing

Wendy von Wald
Deputy

COUNTY SURVEYOR

Pursuant to Minnesota Statutes, Chapter 389.09, Subd. 2, this CIC Plat has been reviewed and is approved this 10th day of February, 2003.

Edward G. Kinsle
County Surveyor

ENGINEER'S CERTIFICATE

I, Michael E. Gowin, pursuant to Minnesota Statutes, Section 515B.2–101(c), do hereby certify that all structural components and mechanical systems serving more than one unit in all buildings containing the units thereby created are substantially completed.

Dated this 5th day of Feb., 2003.

Michael E. Gowin, Licensed Professional Engineer
Minnesota License No. 15752

ENGINEER ACKNOWLEDGMENT

STATE OF MINNESOTA
COUNTY OF DODGE

The foregoing instrument was acknowledged before me this 5th day of February, 2003, by Michael E. Gowin, a Licensed Professional Engineer.

Beth A. Davis
Notary Public, Dodge County, Minnesota

My commission expires on 1.31.2005

BETH A. DAVIS
NOTARY PUBLIC-MINNESOTA
MY COMMISSION EXPIRES 1-31-2005

PROPERTY LOCATION MAP
SECTION 9, TOWNSHIP 107N, RANGE 14W

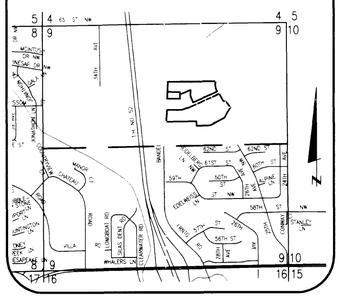

422 A

PREPARED BY:
McGHIE & BETTS, INC.
CONSULTING ENGINEERS
PLANNERS, LAND SURVEYORS
ROCHESTER, MINNESOTA

5247/2157

OFFICIAL PLAT

CIC NUMBER 191

A CONDOMINIUM, BOULDER RIDGE TOWNHOMES

THIRD SUPPLEMENTAL CIC PLAT

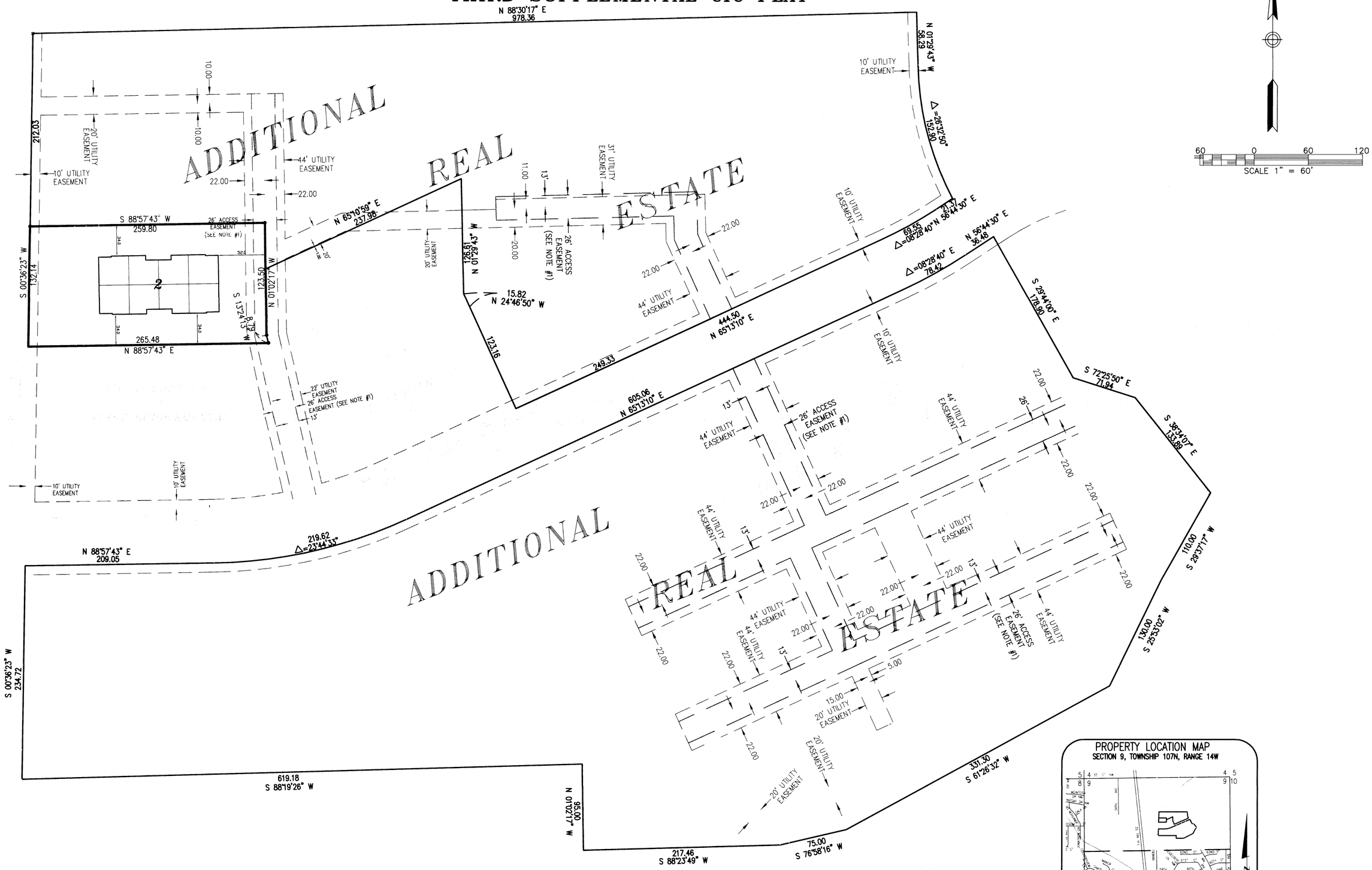

NOTE#1

DECLARATION OF PRIVATE ACCESS EASEMENTS RECORDED AS DOC. NO. A-897726 AND ALSO AMENDED AND RESTATED DECLARATION OF PRIVATE ACCESS EASEMENTS RECORDED AS DOC. NO. A-936006

BASIS OF BEARING SYSTEM :
ALL BEARINGS ARE IN RELATIONSHIP WITH THE WEST LINE NE1/4 SEC 9-107-14 WHICH IS ASSUMED TO BE N 01°02'17" W.

422B

PREPARED BY:
McGHIE & BETTS, INC.
CONSULTING ENGINEERS
PLANNERS, LAND SURVEYORS
ROCHESTER, MINNESOTA

5247/2157

CIC NUMBER 191

A CONDOMINIUM, BOULDER RIDGE TOWNHOMES

THIRD SUPPLEMENTAL CIC PLAT

UNIT DETAIL
(ASBUILT)

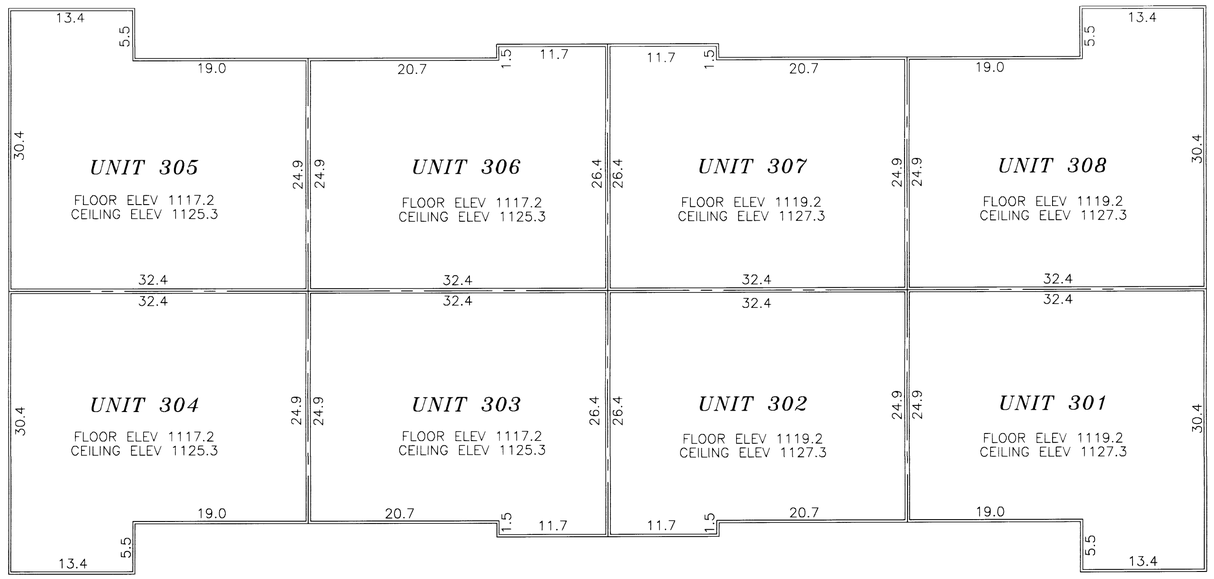

2ND FLOOR

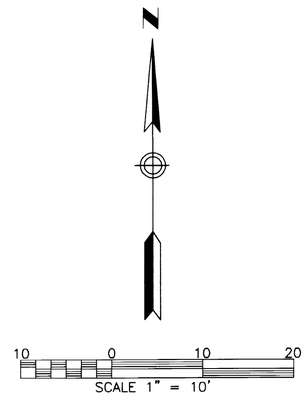

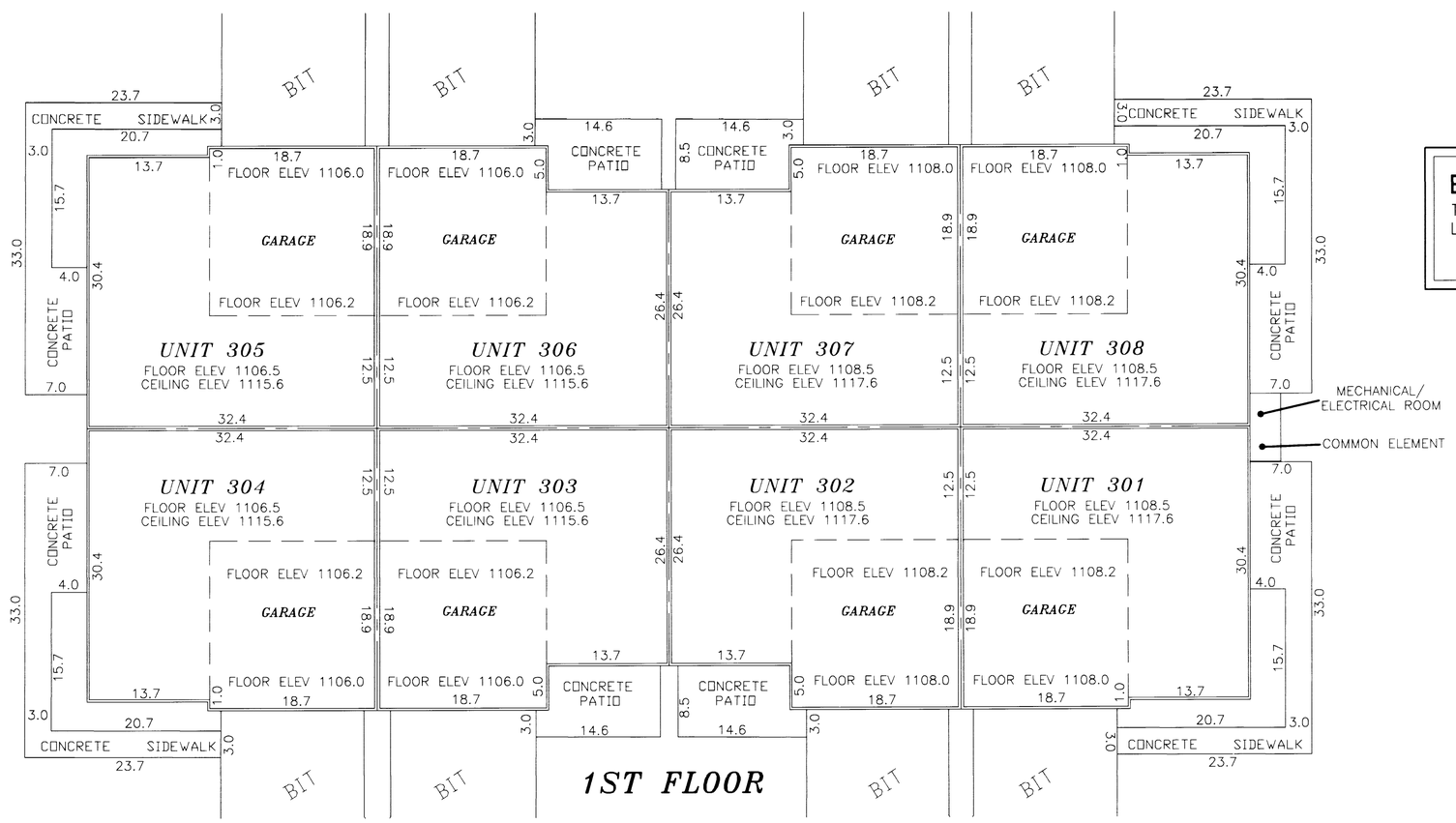

1ST FLOOR

B.M. ELEV. 1108.38
TOP HYDRANT NUT @ EAST SIDE OF
LOT 2 BLK 1

NOTES:

DIMENSIONS SHOWN ARE IN FEET AND TENTHS OF A FOOT.

ALL UNIT DIMENSIONS ARE TO THE FACE OF WOOD STUD FRAMING.

423A

PREPARED BY:
McGHIE & BETTS, INC.
CONSULTING ENGINEERS
PLANNERS, LAND SURVEYORS
ROCHESTER, MINNESOTA

5247/2157